RISEN ENERGY CO., LTD.
(DOCUMENT)

INSTALLATION AND MAINTENANCE MANUAL OF CONVENTIONAL SINGLE GLASS MODULE

DOCUMENT NO.	RS/03-MTP-015-2019	COMPILER	Liu Fengmin
EDITION	B/0[2019]	REVIEWER	Yuan Huazhi
DISTRIBUTION NO.		APPROVER	Wang Shengjian
STATUS	*STAMP*		

THIS DOCUMENT HAS A TOTAL OF *28* PAGES INCLUDING THE FRONT COVER

ISSUE DATE 2019-04-30 IMPLEMENTATION DATE 2019-04-30

DESCRIPTION OF AMENDMENT

DATE	EDITION	CHAPTER	AMENDED CONTENTS	RECORDER
2018.04	A/0	Full Text	Installation manual instructions	Chen Shuilin
2018.11	A/1	Chapter 8	Add module specifications, update the content	Bai Wenkai
2019.01	A/2	Chapter 2, 8, 11	Installation method modification, update the content	Liu Fengmin
2019.02	A/3	Chapter 8, 9, 10	Remove some module models and update the content	Chen Shuilin
2019.04	A/4	Chapter 8	Add 158.75 Cell module type	Chen Shuilin
2019.04	B/0	Chapter 2, 8,11	Add Added heterojunction module type, update the content	Chen Shuilin

REQUIREMENTS: THIS DOCUMENT SHALL BE REVIEWED AND EVALUATED BY LEADING DEPARTMENT AT LEAST ONCE A YEAR, AND UPDATES SHALL BE MADETO ENSURE THE PRACTICABILITY OF THE DOCUMENT WHEN IT IS NECCESARY.

DOCUMENT COUNTERSIGN

DEPARTMENT NAME	Quality and global customer service	Technical compliance	Global customer service	Pv module Technology Department								
COUNTERSIGNER	Hu yuhui	Yang Xiaowu	Chen Xiaoxu	Yuan Huazhi								

Directory

1 Manual Introduction 4

2 Applicable Products 4

3 Warning 4

4 Safety Cautions 5

5 Unloading, Transportation and Storage 7

5.1 Markers on outer packaging 7

5.2 Unloading cautions 8

5.3 Secondary transportation and Warning 10

5.4 Storage 10

5.5 Markings on module 11

6 Unpacking **11**

7 Installation **12**

7.1 Environment conditions and site selection 12

7.2 Tilt angle of Installation 13

8 Installation Guidelines 14

8.1 Bolt Method 15

8.2 Clamping Method 16

8.3 Recommended installation of module with split J-Box 20

9 Electrical Connection 21

9.1 Bypass secondary 24

10 Grounding **24**

11 Electrical Parameters **25**

12 Inspection and Maintenance **26**

12.1 Module visual inspection and replacement 26

12.2 Cleaning 27

13 Troubleshooting **28**

14 DISCLAIMER **29**

1 Manual Introduction

Thanks for choosing Solar PV modules from Risen Energy Co., Ltd (hereinafter called Risen).

In order to ensure that the PV modules are installed correctly, please read the following installation manual carefully before modules are installed and used.

Please let the well trained professional to engage the PV module's installation, running and maintenance due to these works are based on the professional knowledge. The personnel for the installation should be familiar with the mechanical and electrical requirements.

Please get contact with Risen After Service Department (afterservice@risenenergy.com) or Risen local agency if you want to get more details or there is any question.

2 Applicable Products

This document is applicable to the following PV Solar Modules types:

RSM60-6-xxx P/M，RSM72-6-xxx P/M，RSM120-6-xxx P/M，RSM144-6-xxx P/M；

RSM60-6-xxx MH，RSM72-6-xxx MH，RSM120-6-xxx MH，RSM144-6-xxx MH ；

RSM68-6-xxx MS，RSM81-6-xxx MS，RSM132-6-xxx P/M ，RSM156-6-xxx P/M；

RSM132-6-xxx MH ，RSM156-6-xxx MH；

The detail parameter can be get from the official module datasheet from our website (**www.risenenergy.com**)

The Solar PV modules described in this manual are terrestrial used only, cannot be used in space. The high altitude influence to module operation should be considered when the modules are installed in high altitude area.

3 Warning

Please read and understand all the safety cautions before the PV module installation, wiring, operation and maintenance.

When exposed to the sun light or other light sources directly, the PV modules will generate the Direct Current, there will be the risk to cause people death when touching the electrical part like the connectors/terminals no matter whether the modules are connected or not.

 WARNING	Maximum series fuse rating 20A Power production tolerance ±3% This module produces electricity when exposed to light. Follow all applicable safety precautions. Only qualified personnel should install or perform maintenance work on these modules Be aware of dangerous high DC voltage when connecting modules. Do not damage or scratch the rear surface of the modules. Do not handle or install modules when they are wet. Follow the battery manufacturer's recommendations if batteries are used with modules.

4 Safety Cautions

In the installation and maintenance, all the Safety Cautions mentioned in this manuals should be followed, in the meantime, all the requirements defined by local law, authority agency or government should be followed.

Failed to follow this manual or the above rules/law will cause the fail of our Limited Warranty to the modules.

- Please get contact with local authority agency to confirm if the installation is legally allowed and meets the installation inspection requirements before installing the PV system.
- When designing the PV system, please be sure to consider about the voltage change under different temperatures (please check the temperature coefficients of all PV modules, when the temperature drops, the variable output voltage of the module will rise).
- The shading on the module surface will affect the power generation much, the module should be installed in the place where the module cannot be shadowed totally (such as the shadow from building, chimney and tree etc.), and even the partially shading (such as the dirt, snow and aerial wire etc.) should be avoided.
- The modules should be kept inside the original packaging before installation. In the transportation and storage period, please do NOT damage the packaging. The packaging cannot be opened unless at the installation site. It is recommended to open the packaging according to the opening procedure and handle this procedure carefully. It is forbidden to let the packaged module dropped directly.
- Please ensure the correct and proper method of transportation and installation, otherwise it could cause the module damage.
- The maximum limit of the stack layer is defined in the outer packaging carton box, please do NOT stack the modules more than this limit. Before opening the packaging, Please keep it in a ventilated, rainproof and dry place.
- It is prohibited to stand, climb, walk and jump on the unpacked packaging.
- To avoid damaging the module and to avoid affecting the module safety, please never put any heavy or sharp objects on the front and rear surface of the module at any time.
- When open the packing box, please use the professional and proper tools which can avoid the inclining and dropping of the module. It is forbidden to put the module in a place without any supports or fixtures.
- Never handle and move the module via the cable or the J-Box at any time. At least 2 personnel with non-slip gloves are required to handle one module at the same time. Do NOT carry the module via overhead and do NOT handle the stacked modules for moving.
- Please store the modules in a ventilated, rainproof and dry place when the temporary storage is needed.
- Please ensure all the modules and electrical contact parts are clean and dry in the

installation.

- Do NOT install any module when it is raining, snowing and strong windy.
- Artificially concentrated sunlight shall NOT be directed on the module.
- Use durable, rust-resistant and UV-resistant materials to fabricate the module bracket structures which have been tested, certified and approved.
- When the modules were installed on the brackets, the brackets structure should have the ability to bear the wind load and snow load at site. And please ensure these load will not exceed the maximum load design of the module.
- The modules with the glass broken or the back-sheet damage cannot be repaired and CANNOT be used, there will be the electrical shock risk in case to touch the surface or frame of these kind of modules. Do NOT try to disassemble the module, and do NOT remove or damage the module nameplate and any other parts of the module.
- It is FORBIDDEN to stand on the modules in the installation progress, and do NOT damage or scratch the glass surface of the module.
- Do NOT apply any paint or glue to the module glass surface.
- The Solar PV modules will generate the electrical power when exposed to the sunlight, and this power is sufficient to cause fatal electrical shock and burning risk. Only the authorized personnel who is professional trained can close to the solar PV module.
- To avoid the electrical shock and burning risk, the opaque material can be used to cover the modules in the installation.
- To avoid the electrical shock risk by damaged module, please do NOT wear metal objects such as ring, watch, ear ring and nose ring in the term of the installation and maintenance.
- Do NOT disconnect any electrical connections or unplug any connectors under circuit load.
- In order to prevent the degradation of the module insulation ability, please avoid scratching and cutting any cables or connectors.
- Use well insulated tools in accordance with relevant electrical installation standards. Keep children away from the installation site during transportation and assembly.
- Installation shall comply with local safety regulations (e.g., safety regulations, plant operation regulations), including wires and cables, connectors, charging controllers, inverters, batteries, rechargeable batteries, etc.
- Under the requirements of the NEC (National Electrical Code), the maximum system voltage shall not be higher than 1000V or 1500V. And the actual system voltage is specified on the nameplate of the module you are using.
- Under normal conditions, a mono-facial dual glass PV module is likely to experience conditions that produce more current and/ or voltage than reported at standard test conditions. The requirements of the National Electrical Code (NEC) in Article 690 shall be

followed to address these increased outputs. In installations not under the requirements of the NEC, the values of Isc and Voc marked on this module should be multiplied by a factor of 1.25 when determining module voltage ratings, conductor ampacities, overcurrent device ratings, and size of controls connected to the PV output; for bifacial dual glass module, additional factor of 1.1 should be multiplied at the same time.

- Risen Solar PV module is designed according to the IEC61215 and IEC61730, The application level is Class A, which can be used in systems operating at greater than 50 V DC or 240 W, where general contact access is anticipated, and Risen module also passed the IEC61730-1 and IEC61730-2, it meets the requirements of safety class Ⅱ.
- Comply with electrical specification - part 1- electrical equipment safety standard CSA C22.1-12-2012.
- Modules with exposed conductive parts shall be grounded in accordance with the instructions in the installation manual and the requirements of the National Electrical Code of the United States, otherwise it will be considered as a violation of UL 1703.
- Please consult with local authorities for the requirements on installation methods and fire safety of buildings.
- Assess the fire rating of the system according to the condition of the roof and mounting brackets, subject to local electrical safety regulations. A suitable layer of fireproof material for this class shall be covered and the ventilation should be maintained.
- The difference of the roof structure and installation method will affect the fire safety performance, and unappropriated installation will take the risk to cause the fire. In order to ensure the fire rating of the roof, the minimum distance between the module frame and the roof surface is 115mm, and appropriate modules such as fuses, circuit breakers and ground connectors should be used according to local electrical safety regulations.
- Observe the safety precautions of the module installation manual. If the modules are installed on the roof, ensure that the roof structure is reasonable. In addition, the installation of any roof modules must be sealed to prevent leakage and to ensure the fire rating levels. The accumulation of dust on the modules surface will impair the performance of the modules. During the installation, the module tilt angle should be maintained at more than 10° to allow the rain to wash away the dust, while the module with too small tilt angle requires more frequent cleaning.
- Please do NOT operate any devices at the place where is closed to the flammable gas.

5 Unloading, Transportation and Storage

5.1 Markers on outer packaging

Discarded at will of the module is forbidden and require special recycling. 	Modules shall be kept dry, NOT exposing to the rain or moisture. 
Modules in carton are fragile, which shall be handled with care. 	The packaging shall be transported upright. 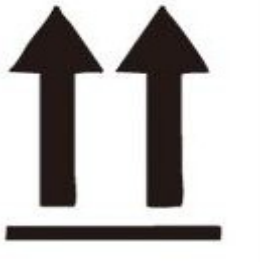
Do not exceed the maximum number of layers of the logo printed on the outer box when stacking modules. 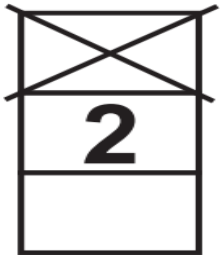	The packaging material can be recycled. 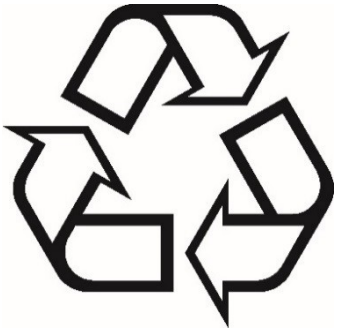

5.2 Unloading cautions

Use a suitable lifting fixture to handle, no more than 2 pallets of modules. Before lifting, check whether the tray and the carton are damaged and whether the hoisting ropes are strong and firm. Two people shall support at the two sides of the righting carton gently to place it on the relatively flat position of the project site.

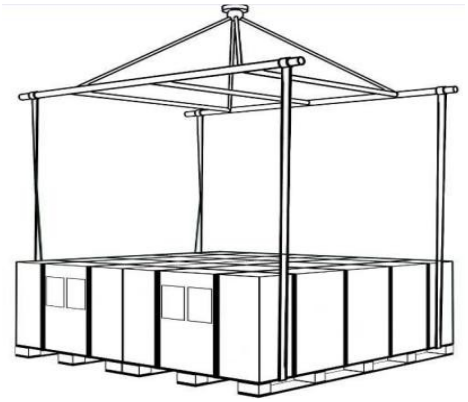

Use a forklift to remove the unit from the truck.

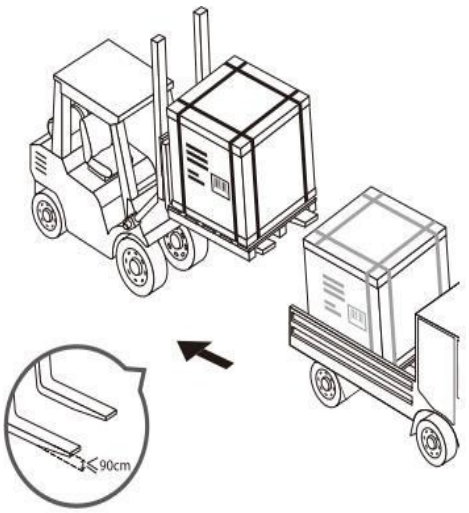

Place the modules on a level surface.

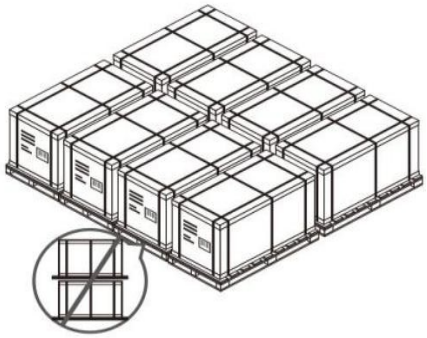

The stacking of modules at the project site is prohibited.

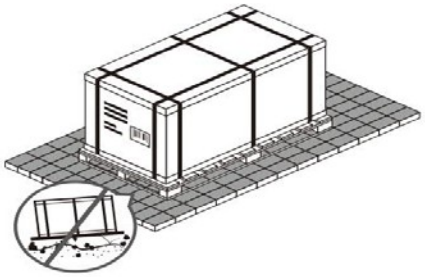

Place the unit in a dry and ventilated place.

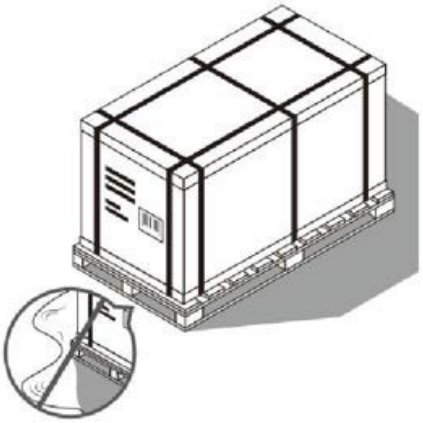

Cover the modules with a tarpaulin to prevent the package from getting wet.



5.3 Secondary transportation and Warning

Do NOT remove the original packages if the modules require long-distance transport or long-term storage.

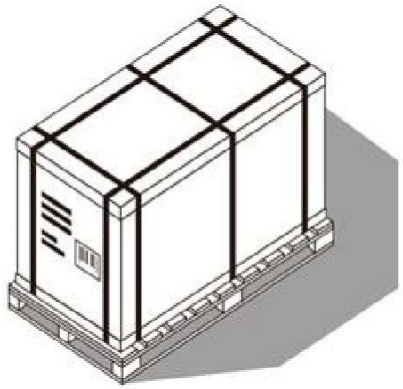

Packaged products can be shipped by land, sea, or air. During transportation, please fix the packing box on the transport platform to ensure that the packing will not roll over. No more than 2 layers by truck normally.

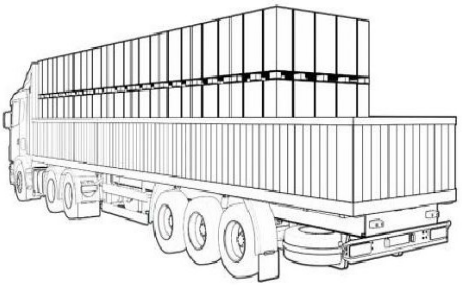

No Transportation of handling by pedi-cab as the following.

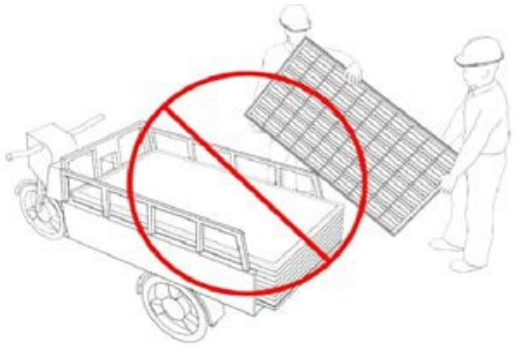

No handling the module with rope as the following.

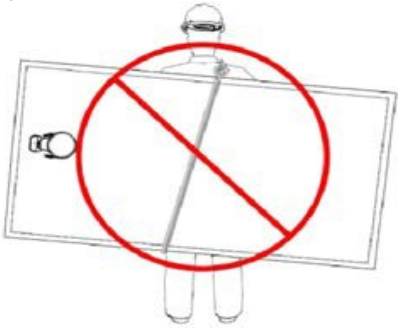

No carrying the module on the back of person



5.4 Storage

- Do NOT expose the modules to rain or moisture. Store the finished product in a ventilated, waterproof and dry place.
- Do NOT remove the original packaging if the module requires long-distance transport or

long-term storage.

- Modules Stacking no more than 1 layers (moisture＜85%RH, temperature in the range from -40°C to + 50 °C) , see Fig. 5-1.

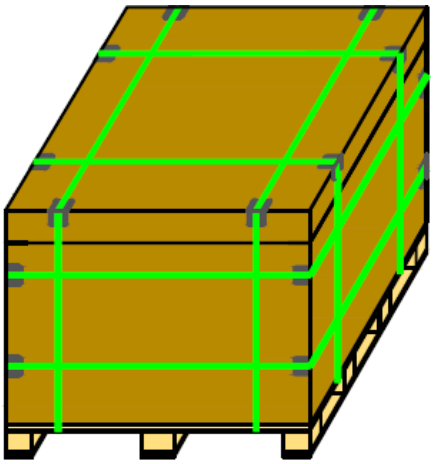

Fig. 5-1 temporary storage at site warehouse

5.5 Markings on module

Three markings are attached on the module with following information:

- Nameplate: module type, nominal power, rated current, rated voltage, Voc, Isc, certification logo and maximum system voltage, etc.
- Current marking: the classification according to the module's current.

To provide clear information of modules for customers to perform efficient installation, modules will be sorted according to four current classifications, which are as follow:

I1：Current Classification 1　　I2：Current Classification 2

I3：Current Classification 3　　I4：Current Classification 4

- B: Unique bar code for each module. The bar code used by Risen includes 14 digits or letters, and details are as follow. Set the YYMMDDABBCCCCC as the example:
  - ✓ From the 1st to the 6th digits: YYMMDD means the manufacturing date; YY is the actual manufacturing year +25, MM is the actual manufacturing month +11, DD is the actual manufacturing date.
  - ✓ The 7th letter: A means Code for internal identification;
  - ✓ The 8th and 9th digits: BB means the manufacturing workshop;
  - ✓ From the 10th to the 14th digits: CCCCC means the serial number of production.

6 Unpacking

- As for outdoors unpacking, it is prohibited to operate in rainy conditions. Because the carton will become soft and damaged after it gets wet in the rain. The PV modules (hereinafter referred to as "modules") inside the carton will incline, which may cause

damage or injury to personnel.

- If there is wind at site, it is necessary to pay special attention to safety, especially in strong wind conditions, and it is NOT recommended to transport the modules at this situation. The unpacked modules shall be fixed properly.
- The ground should be flat where unpack the packaging, this will ensure that the carton can be placed stably and to avoid incline.
- Wear protective gloves during unpacking to avoid hand injury and finger prints on the glass surface.
- Module information and unpacking instructions can be found on the outer package. Please read the instructions before unpacking.
- Each module shall be handled by two personnel. It is forbidden to pull the wires or junction boxes of the modules to carry the module.

7 Installation

7.1 Environment conditions and site selection

Risen module should be installed in the following environmental conditions.

Table 7-1 operation condition

NO.	Environmental conditions	Range
1	Recommended Working temperature	-20°C to+50°C.
2	Extreme Working temperature	-40°C to +85°C
3	Storage temperature	-20°C to +50°C
4	Humidity	＜85 RH%

Remarks: The working environment temperature is the monthly average maximum temperature and minimum temperature of the installation site. The mechanical load bearing capacity of the solar PV module is determined based on the installation method. The professional solar PV system installer must be responsible for calculating the solar PV system machinery when designing the solar PV system load bearing capacity.

- If the module will be installed in a place of which the humidity is more than 85RH%, please get contact with Risen After Service team (afterservice@risenenergy.com) for the properly installation method, or check whether the module can be installed or not.
- For most places, Risen solar PV modules should be installed where the sunlight can be maximally acquired throughout the year. In the Northern hemisphere, the light-receiving surface of the module is usually selected to face the South; in the Southern hemisphere, the light-receiving surface of the module is usually selected to face the North.
- When selecting the installation location, avoid areas with trees, buildings, or obstacles

because these objects will form shadows on solar PV modules, especially when the sun is at the lowest position on the horizon in winter. The shadow will cause the loss of the output power of the solar photovoltaic system. Although the bypass diode installed in the solar photovoltaic module can reduce this loss to some extent, do not ignore the shadow factor.

- Do not install solar PV modules near fire or flammable materials. Do not install solar PV modules where there is water soaking, sprinkler or water spray.
- According to IEC 61701, salt mist corrosion testing of photovoltaic (PV) modules, Risen Solar modules can be installed in corrosive salt areas within proximity of the ocean or sulfurous areas. The module must not be soaked in the water or be installed in the environment (i.e., fountain, spindrift, etc.) where the module would touch water (pure water or brine) for a long term. If the modules are placed in an environment of salt fog (i.e., marine environment) or sulfur (i.e., sulfur sources, volcanoes, etc.), there is a risk of corrosion.
- According to the test result of IEC62716:2013 “Ammonia corrosion testing of photovoltaic (PV) modules” for ammonia resistance, Risen Solar modules can be safely installed in ammonia-heavy environments, such as farm, meadow and so on. I

7.2 Tilt angle of Installation

- The installation of solar PV module string should be in the same orientation and the same installation angle. Different installation directions and installation angles will lead to the mismatches in current and voltage which is caused by different light absorption of different solar modules, this mismatch will cause the PV system power output loss.
- The largest power will be generated When direct sunlight on solar PV module. For modules which are installed on the fixed brackets, the best installation angle should be selected to ensure the maximum power output can be generated at winter time, if the angle can guarantee enough power output during the winter, it will make the whole solar PV system in the rest of the year can have enough power output also.
- The tilt angle measurement of the PV module refers to measuring the angle between the module and the horizontal ground surface. For different projects there are different mounting angles. Be in accordance with local regulations or follow the recommendations of experienced PV module installers.

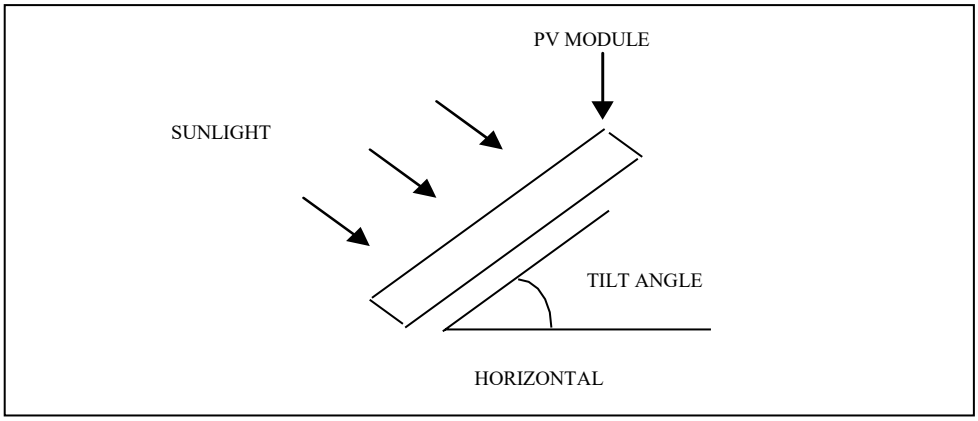

Fig. 7-1 Tilt angle

Table 7-2 Recommended tilt angle for fixed systems

Recommended tilt angle for fixed systems	
latitude	Fixed angle of inclination
0°~15°	15°
15°~25°	The same latitude
25°~30°	Same latitude +5°
30°~35°	Same latitude+10°
35°~40°	Same latitude +15°
40°+	Same latitude +20°

8 Installation Guidelines

Risen modules can be installed through bolt method and clamp method.

Please ensure the following points no matter which method is used.

- ✓ Please ensure that the modules with the same color cells to be installed together.
- ✓ The minimum clearance between module frame and wall or roof should be ensure 115 mm at least.
- ✓ The minimum clearance between two adjacent modules must not be less than 20mm.
- ✓ The module frame drain holes cannot be blocked in any situation during installation or use.
- ✓ Modules shall not be subjected to wind or snow loads which is exceeding the maximum permissible designed loads, and shall not be subjected to excessive forces due to the thermal expansion of the support structures. The selection and design of mounting bracket shall be carried out by professional system engineers after the load calculation

according to the climatic conditions of the installation site.

The installation method listed below are for your reference only, the PV system installer or the trained professionals should take the responsibility of the PV system design, mechanical load calculation, install, maintenance and safety,

Risen will not supply the related material for system installation.

Tools: screwdriver, wrench, stainless steel screw/bolt, clamp, nut and spring washer, plain washer.

8.1 Bolt Method

Fix the solar PV module with corrosion-resistant M8 stainless steel bolt through the installation holes which is located at the module frame. Risen suggests to install the module in vertical direction by which the module will not be easy to slip down, it will make the installation much safer.

The aluminum frame of each solar photovoltaic module has 8 mounting holes or 4 mounting holes. Under the mounting position shown in table 8-1, the static load that the front side of the module can bear is 5400 pa and the reverse side is 2400pa

Solar PV modules can be fixed to the bracket system via M8 corrosion-resistant bolts and matching nuts together with spring washers and plain washers by 16N•m-20 N•m applied torque. Please refer to the installation diagram below for details.

Table 8-1 mechanical loading for bolt method

Method	wrong side ≤2400pa； Front side ≤5400pa （see Fig.8-1）	
Bolt fixing mode	4 bolts for fixing	Bolt fixing mode

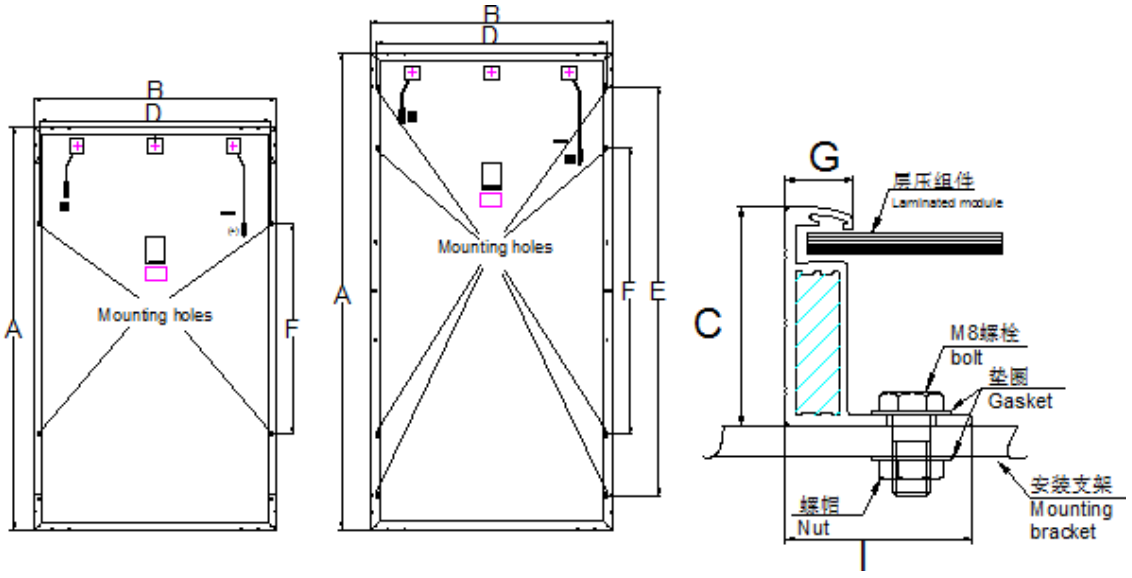

Fig. 8-1 Drawing of installation dimension

Table 8-2 installation dimensions

Module type	Module size A*B*C（mm）	Mounting holes D*E/D*F（mm）	Wire length （mm）	Aluminum frame size C*I（mm）
RSM60-6-xxxP/M RSM60-6-xxxMH	1650*992*35	952*870	900mm	35*30
	1650*992*25	957*870	900mm	25*25/15
	1657*996*35	946*1150/946*1400	900mm	35*35
RSM120-6-xxxP/M RSM120-6-xxxMH	1685*992*35	952*870	270&100mm	35*30
	1685*992*25	957*870	270&100mm	25*25/15
	1689*996*35	946*1150/946*1400	900mm	35*35
RSM72-6-xxxP/M RSM72-6-xxxMH	1956*992*40	942*1676/942*1176	1200mm	40*35
	1956*992*35	952*1676/952*1176	1200mm	35*30
	1956*992*25	957*1676/957*1176	1200mm	25*25/15
	1979*996*40	946*1200/946*1600	1200mm	40*35
RSM144-6-xxxP/M RSM144-6-xxxMH	2010*992*40	942*1676/942*1176	270&100mm	40*35*
	2010*992*35	952*1676/952*1176	270&100mm	35*30
	2010*992*25	957*1676/957*1176	270&100mm	25*25/15
	2015*996*40	946*1200/946*1600	1200mm	40*35
RSM68-6-xxxMS	1622*1068*35	1018*980	1000mm	35*30
RSM81-6-xxxMS	1942*1069*40	1019*1162/1662	1200mm	40*35
RSM132-6-xxxP/M RSM132-6-xxxMH	1852*996*35	946*1150/946*1400	900mm	35*35
RSM156-6-xxxP/M RSM156-6-xxxMH	2178*996*40	946*1200/946*1600	1200mm	40*35

8.2 Clamping Method

- Clamping method: Fix the length and width of the solar PV modules with suitable clamps. To be securer and less prone to slippage, when mounting with clamps, Risen recommends that you lay the modules horizontally.
- Secure the solar PV module to the mounting bracket by using a number of clamps and M8 nuts. Do not touch the front glass with the clamps installed, and do not deform the aluminum frame during installation, and avoid causing shadows to the solar PV modules. When choosing clamping method, each solar PV module needs at least four clamps. Applied

torque is 16 ~ 20N·m.

- Depending on the local wind and snow conditions, additional clamps may be needed to ensure that solar PV modules and systems can withstand the additional load. One or two clamps can be added at the place where between the previous two clamps. It can also be reinforced by mounting holes or by increasing the length of the clamps.

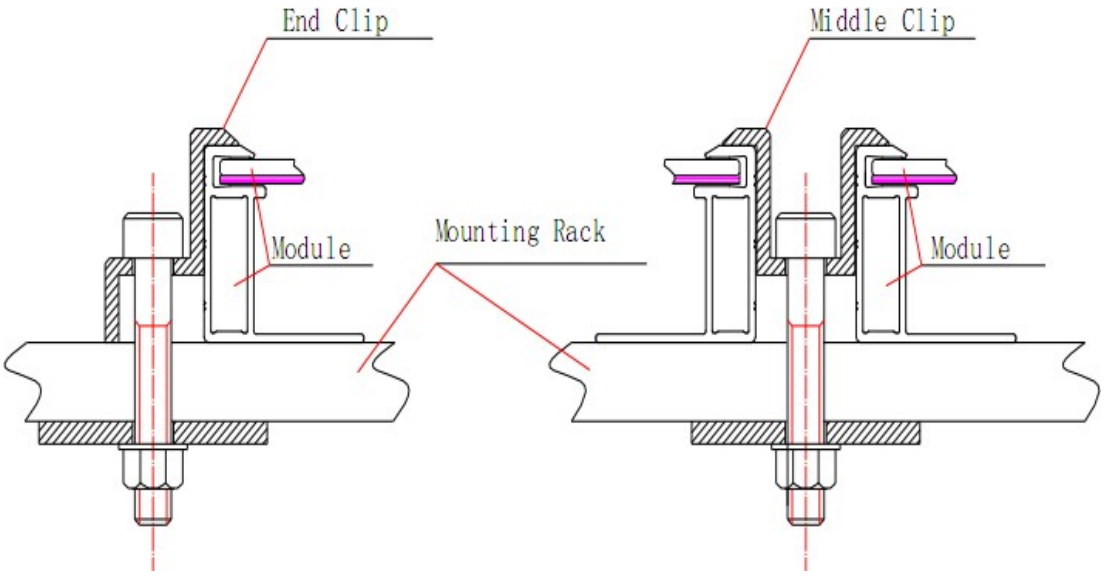

Fig. 8-2 Clamping method

Table 8-3 Clamping dimensions

Clamp	Edge Clamp	Middle Clamp
Drawing	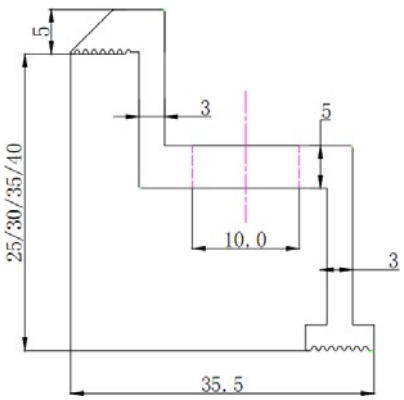	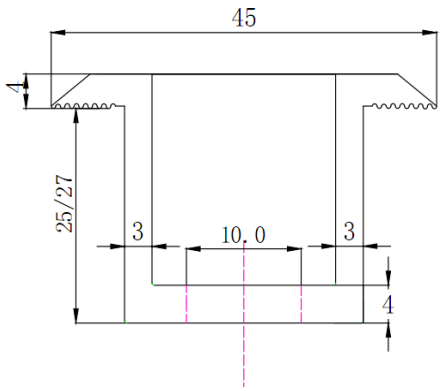
Specification	L*W*H 50*35.5*25/30/35/40mm	L*W*H 50 *45*25/27mm
Modules	M8 Bolt / Nut / Spring washer / Plain washer	

Remarks: The clamps must be at least 7mm – 10mm from the module frame (do not exceed G in Fig. 8-1, which is no more than 10mm).

Depending on local wind and snow conditions, the following two clamping methods are recommended by Risen:

- Clamping method A

Table 8-4 Dimensions of Clamping method A

Clamping method A（ See Fig. 8-3）			
Mechanical Load		2400Pa	5400Pa
Module Type	A*B （Length x Width）	Between corner to R1	Between R1 and S1
RSM60-6-XXXP/M&MH	1650*992	199	248
RSM60-6-XXXP/M&MH	1657*996	199	249
RSM72-6-XXXP/M&MH	1956*992	199	248
RSM72-6-XXXP/M&MH	1979*996	199	249
RSM120-6-XXXP/M&MH	1685*992	199	248
RSM120-6-XXXP/M&MH	1689*996	199	249
RSM144-6-XXXP/M&MH	2010*992	199	248
RSM144-6-XXXP/M&MH	2015*996	199	249
RSM68-6-XXXMS	1622*1068	214	267
RSM81-6-XXXMS	1942*1069	214	267
RSM132-6-xxxP/M&MH	1852*996	199	249
RSM156-6-xxxP/M&MH	2178*996	199	249
Remarks: The length of the clamp is 50mm and the thickness ≥3mm. Each module needs at least 4 clamps. Additional clamps can be used when reinforcement is needed. Applied torque is 16 ~ 20N·m.			

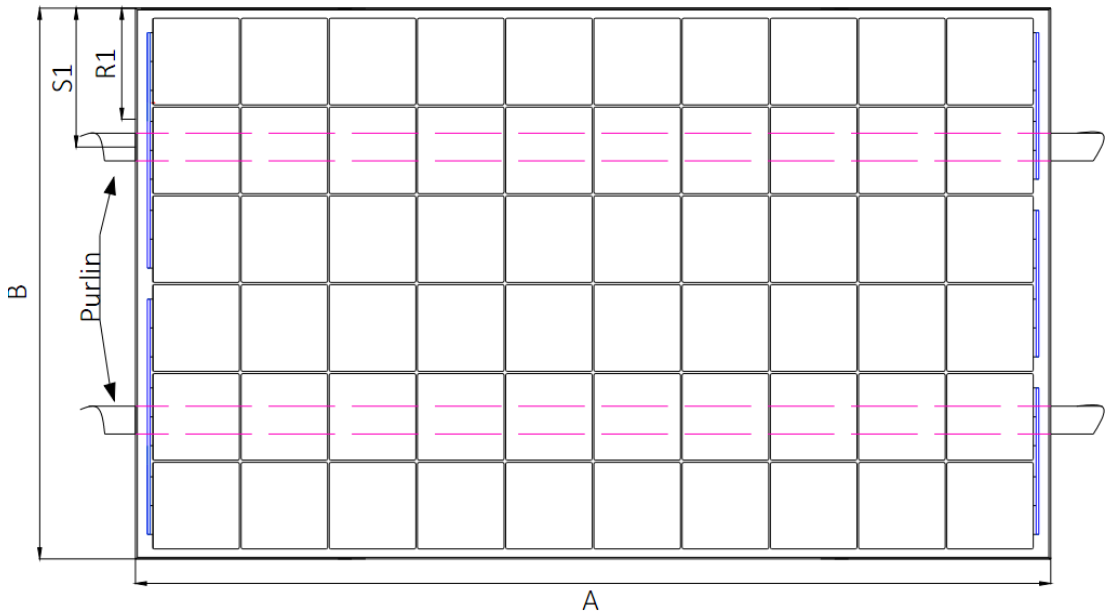

Fig. 8-3 Clamping Method A

- Clamping method B

Table 8-5 Dimensions of Clamping method B

Clamping Method B(See Fig. 8-4)			
Mechanical Load		**2400Pa**	**5400Pa**
Module Type	**A*B（Length x Width）**	**Between corner to R2**	**Between R2 and S2**
RSM60-6-XXXP/M&MH	1650*992	330	413
RSM60-6-XXXP/M&MH	1657*996	331	414
RSM72-6-XXXP/M&MH	1956*992	391	489
RSM72-6-XXXP/M&MH	1979*996	396	495
RSM120-6-XXXP/M&MH	1685*992	337	421
RSM120-6-XXXP/M&MH	1689*996	199	249
RSM144-6-XXXP/M&MH	2010*992	402	503
RSM144-6-XXXP/M&MH	2015*996	403	503
RSM68-6-XXXMS	1622*1068	325	406
RSM81-6-XXXMS	1942*1069	388	486
RSM132-6-xxxP/M&MH	1852*996	370	463
RSM156-6-xxxP/M&MH	2178*996	435	544
Remarks: The length of the clamp is 50mm and the thickness ≥3mm. Each module needs at least 4 clamps. Additional clamps can be used when reinforcement is needed. Applied torque is 16 ~ 20N·m.			

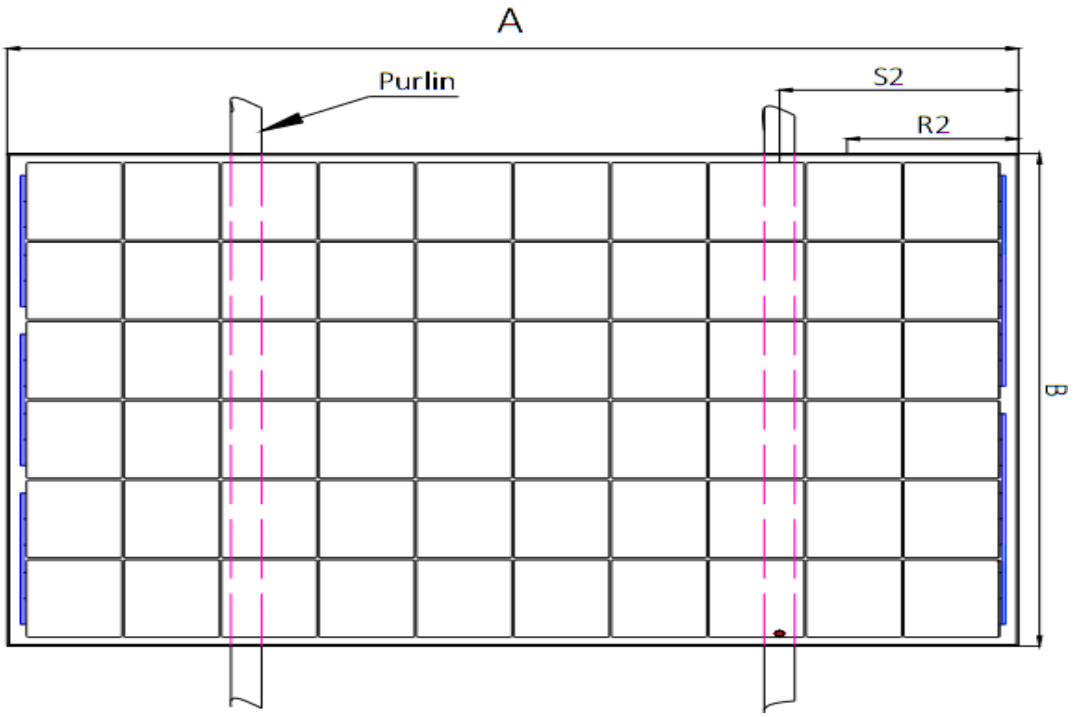

Fig. 8-4 Clamping Method B

Use the long side of the module for clamping is the first option. Other installation methods shall be confirmed with the professional team of Risen. The system installer or trained professional should be responsible for the design, mechanical load calculation, installation and maintenance of the PV system.

8.3 Recommended installation of module with split J-Box

The recommended vertical installation connection methods for module with split J-Box are as follows (The extension cable is required).

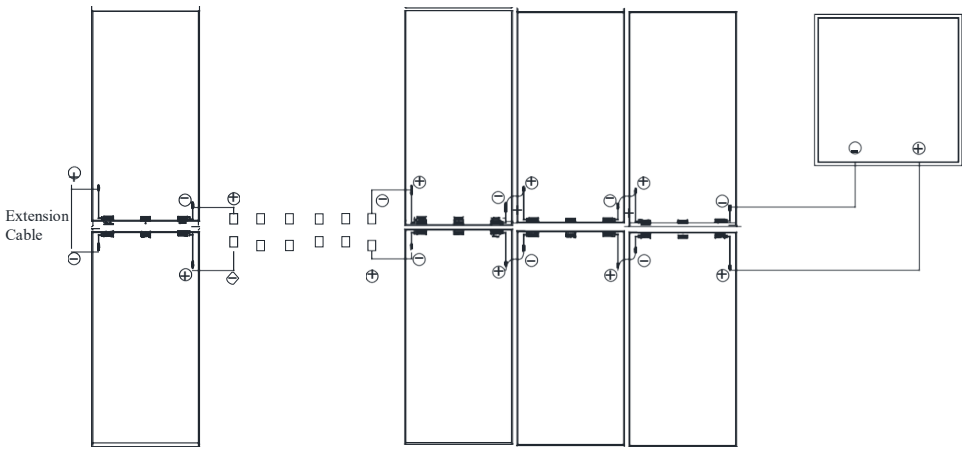

Fig. 8-5 Split J-Box at module side position for vertical direction

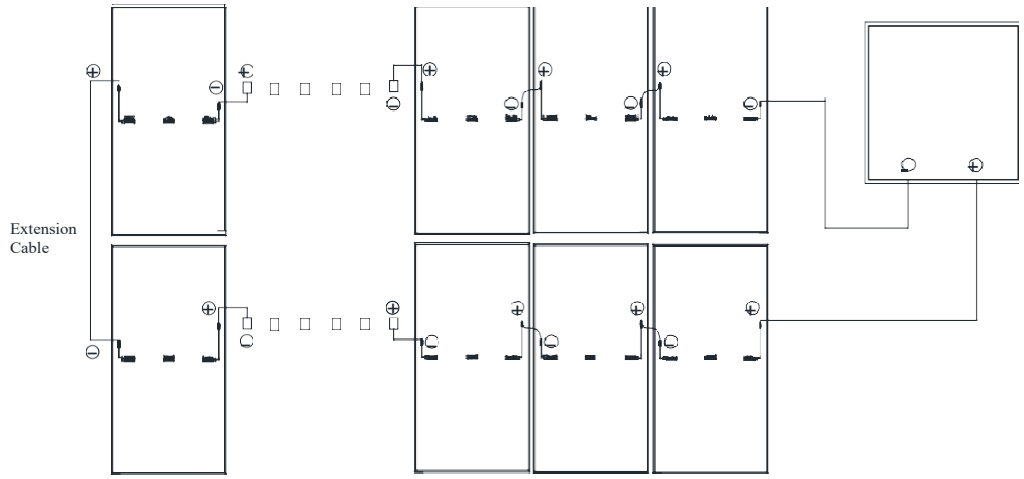

Fig. 8-6 Split J-Box at module middle position for vertical direction

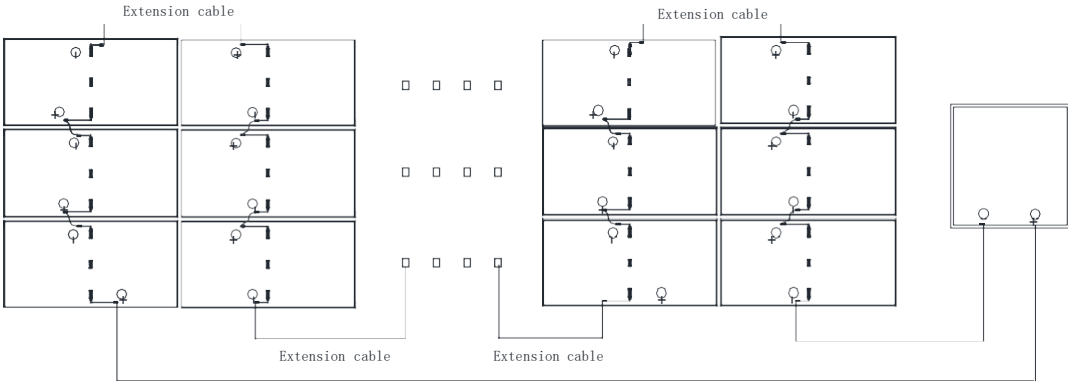

Fig. 8-7 Split J-Box at module middle position for horizontal direction

Precautions: Pay attention to the direction of the wire when installing the modules. It should be connected along the wire direction to avoid bending the wire.

9 Electrical Connection

- The Direct Current (DC) generated by the PV system can be converted to Alternating Current (AC) and connected to the public power grid. Different regions may have different policies, laws and regulations to stipulate the installation and grid-connection requirements of PV systems. Therefore, during the design, installation and grid-connection of PV system, please comply with the local policies, laws and regulations.
- PV modules can obtain different current and voltage outputs through series connection and parallel connection. Read this installation manual carefully before electrical connection and installation. Please design and connect according to the current and voltage required by customers. Before connection, please ensure that the connection part is free from corrosion, and keep it clean and dry.
- In order to ensure the normal running of the system, when connecting modules or loads, please ensure that the polarity of the cable connection is correct. If the modules are

incorrectly connected, the bypass diodes and junction boxes may be damaged. PV modules can be connected in series (Fig. 9-1), in parallel (Fig. 9-2) and in series-parallel (Fig. 9-3). The number of serial or parallel connections shall be reasonably designed according to the system configuration. Also note that if the number of parallel connections ≥2, there must be an over-current protection device on each string assembly; bypass diodes are used for over-current protection, and the maximum over-current protection rating is 20A. The bypass diodes (type: SBRB3050TS) used for protection are manufactured by Zhejiang Twinsel Electronic Technology Co., Ltd.

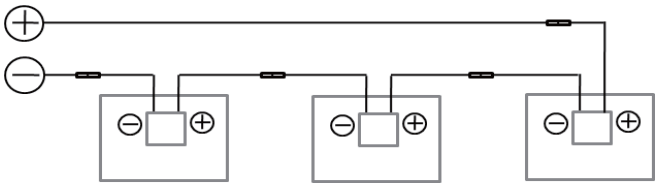

Fig. 9-1 Series Connection

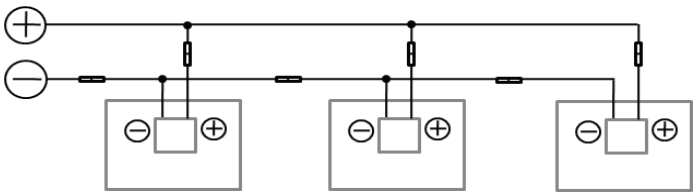

Fig. 9-2 Parallel Connection

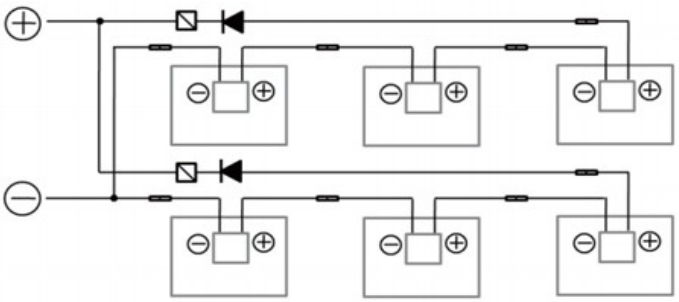

Fig. 9-3 Parallel-series Connection

- Different types of modules cannot be connected in series. Modules connected in series should ensure the consistency of their current. The voltage of the module string should not exceed the allowable system voltage value, which can be found on the nameplate or datasheet of the module.
- The maximum number of modules in series depends on the system design, the type of converter used and the environmental conditions. In general, the maximum number (N) of PV modules in series can be calculated by dividing the maximum system voltage by the open circuit voltage of the relevant solar PV modules. When designing the solar PV system, it is

necessary to take into account the characteristic that the voltage of the solar PV module changes with the temperature. Considering the voltage increase caused by temperature drop in extreme environment in winter, the maximum series connection number of solar PV

modules can be calculated by the following formula.

Table 9-1 maximum series connection number calculation

Formula	Maximum system voltage $V \geq N \times V_{oc} \times [1+\beta \times (T_{min}-25)]$		
V	Maximum system voltage		
N	The number of maximum solar PV modules in series		
V_{oc}	The open circuit voltage of each module (see product label or data sheet)		
β	Temperature coefficient of open circuit voltage of the module (refer to data sheet)		
T_{min}	The lowest ambient temperature at installation site		
60/120pcs 1000V Module	The recommended maximum number of solar PV modules in series is N 22	**60/120pcs 1500V Module**	The maximum number of solar PV modules in series is recommended to be N 33
72/144pcs 1000V Module	The maximum number of solar PV modules in series is recommended to be N 18	**72/144pcs 1500V Module**	The recommended maximum number of solar PV modules in series is N 28

Remarks: if the number of parallel connections is greater than or equal to 2, there must be an over-current protection device on each string of modules.

- The temperature range of cable (H1Z2Z2-K, 1x4mm^2, manufacture by Zhejiang Twinsel Electronic Technology Co., Ltd.) used for modules is from -40 ℃ to 90 ℃.
- Product can be irreparably damaged if an array string is connected in reverse polarity to another. Always verify the voltage and polarity of each individual string before making a parallel connection. If you measure a reversed polarity or a difference of more than 10V between strings then check the string configuration before making the connection.
- Before wiring the module, ensure that the contact points are corrosion resistant, clean and dry; If a string of modules is reversed, irreparable damage can be caused
- For relatively large installations, nison recommends that you use lightning protection in accordance with local requirements and regulations.
- Each Risen solar PV module has two PV cables which can withstand 90℃ temperature and they are sunlight resistant (UV). The cross-sectional area of the cable is 4mm² or 12AWG, and the external diameter is 4mm-7mm. Plug & Play connectors are included at the end of each cable. All other cables used to connect the direct current system shall have similar (or higher) specifications, and should have the suitable insulation ability which can suffer the possible maximum system Voc (as defined in TUV 2PfG1169 or EN50618 (H1Z2Z2-K)). Risen requires all cables and electrical connections to comply with the electrical regulations of the countries where the PV system is installed.
- When selecting a cable, the minimum current-carrying capacity of the cable can be calculated by the following formula.

  Minimum current-carrying capacity of the cable = 1.25 x Isc x Np
  Isc: short-circuit current of PV module (unit: A)

Np: the number of modules in parallel or module strings

- To clear or trim excess cables and Risen recommends that all cables be placed in proper pipework and away from standing water.
- Risen recommends using lightning protection devices which are complied with local laws and electrical regulations

9.1 Bypass secondary

- ✓ If solar photovoltaic module part by shadow block, which can lead to reverse voltage related to solar cells, solar photovoltaic modules in other unaffected battery string or other solar PV modules in the system and current will force through keep out part of the power loss and heat affected cell. When the solar photovoltaic module is connected in parallel with the bypass diode, the current in the system will flow directly through the diode, so as to bypass the blocked part of the solar photovoltaic module and minimize the heating degree and power consumption of the solar photovoltaic module.
- ✓ Each module has three diodes. Each module has three diodes. Diode model, such as 15 qs045/20 sq045 / SBRB2045S SMBRB3045S /GF2045MG /SBRB3050TS /MSB3050T3A/MSB3050T3B (Twinsel PV junction box - SY001 / PV - SY005 / PV - SY015 / PV - RS006 / PV - SY017). Please do not try to open the junction box to replace the diode, or even when the diode problem, please do this work by professionals

10 Grounding

- All PV module frames and mounting brackets must be properly grounded in accordance with the applicable national electrical code.
- Correct grounding is achieved by continuously connecting the PV module frame and all metal modules together using the appropriate grounding conductor. The grounding wire may be copper, copper alloy or other materials that can be used as conductors and meet the requirements of the national electrical code. It is recommended to use the copper wire (4-14 mm^2 or AWG 6- 12) as the grounding wire. The signal" ⏚" can be found at the grounding hole position. The ground wire must also be connected to ground through a suitable ground electrode. The tight connection of all the joint point should be ensured.
- On a grounding hole with a diameter of φ4 mm, use a separate grounding wire and related accessories to connect the aluminum frame of the solar PV module and connect the grounding wire to the ground. The grounding uses the M4 x 12mm bolts and M4 nuts, star washers and plain washers, this ensures that the modules are firmly grounded. You can find the corresponding product drawing in module datasheet to know the detailed number, size and position of the grounding holes, The torque applied to ground fixation is 4N· m~8N ·m.

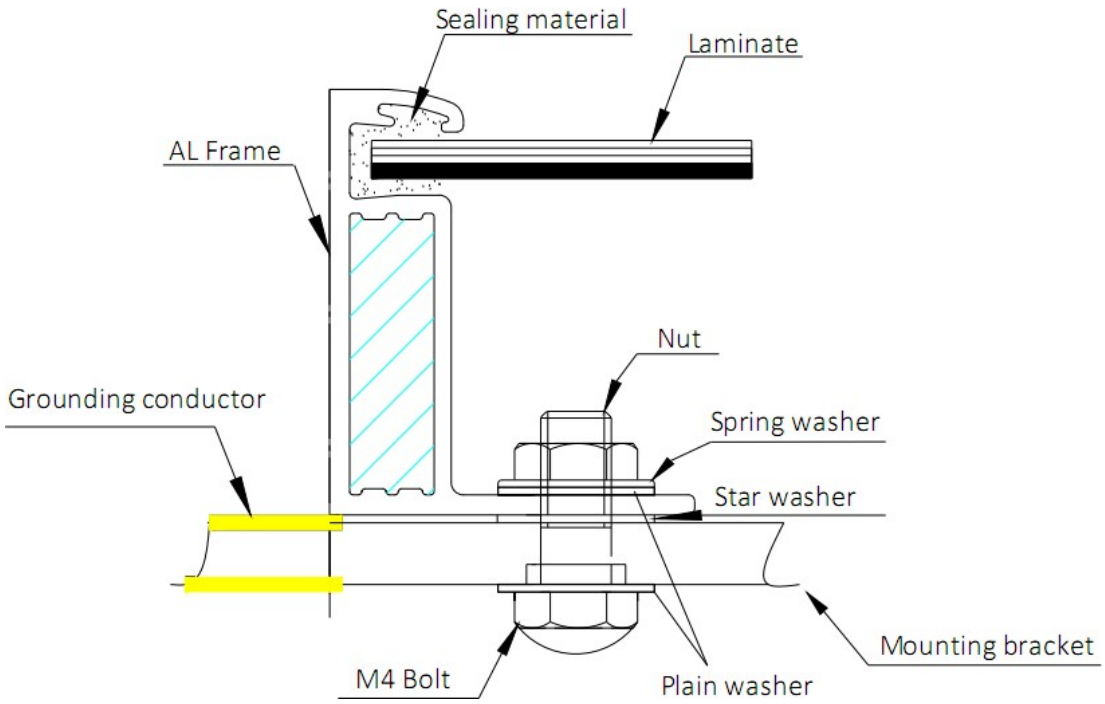

Fig. 10-1 Grounding

- When grounding, each module can be grounded directly or in series or in parallel. If you choose the latter two options, it is recommended that the maximum number of modules connected in parallel should not exceed four, and in series should not exceed eight.
- In addition to use the grounding hole, you can also choose the following grounding ways:
  - ✓Grounding by unused mounting holes
  - ✓Other professional grounding devices

The electrical contact points of all the above grounding methods should penetrate the anodized film of the aluminum frame. Risen modules can be grounded by other grounding devices, which must be reliable and certified. The manufacturer's requirements should be followed.

11 Electrical Parameters

RSM72-6-xxxP, 370-395w, in steps of 5w.

RSM120-6-xxxP,310-335w, in steps of 5w.

RSM144-6-xxxP,375-400w, in steps of 5w.

Model series	STC (1000W/m^2, AM1.5, Cell Temp. 25℃)						NMOT (800W/m^2, AM1.5, Wind speed 1m/s)				
	Pmax (Wp)	Voc (V)	Isc (A)	Vm (V)	Im (A)	Module Efficiency (%)	Pmax (Wp)	Voc (V)	Isc (A)	Vm (V)	Im (A)
RSM72-6-370P	370	47.80	9.95	39.67	9.34	18.8	278.6	43.98	8.06	36.06	7.67
RSM72-6-375P	375	48.20	10.00	40.01	9.39	19.0	280.5	44.34	8.10	36.36	7.71
RSM72-6-380P	380	48.60	10.05	40.34	9.43	19.3	284.2	44.71	8.14	36.66	7.75
RSM72-6-385P	385	49.00	10.10	41.00	9.52	19.8	291.7	45.08	8.18	36.97	7.79
RSM72-6-390P	390	49.40	10.15	41.00	9.52	19.8	291.7	45.45	8.22	37.27	7.83
RSM72-6-395P	395	49.80	10.20	41.33	9.57	20.0	295.5	45.82	8.26	37.57	7.86
RSM120-6-310P	310	40.10	9.93	33.26	9.33	18.4	231.8	36.50	8.12	30.50	7.59
RSM120-6-315P	315	40.30	10.03	33.46	9.43	18.7	235.7	36.60	8.20	30.70	7.67
RSM120-6-320P	320	40.50	10.13	33.66	9.52	19.0	239.3	36.80	8.28	30.90	7.75
RSM120-6-325P	325	40.70	10.23	33.85	9.62	19.3	243.3	36.90	8.36	31.10	7.83
RSM120-6-330P	330	40.90	10.33	34.04	9.71	19.6	246.9	37.00	8.45	31.20	7.92
RSM120-6-335P	335	41.10	10.43	34.22	9.80	19.90	250.5	37.10	8.53	31.30	8.00
RSM144-6-375P	375	48.40	9.95	40.12	9.36	18.7	280.7	44.70	8.16	36.60	7.67
RSM144-6-380P	380	48.60	10.05	40.26	9.45	18.9	284.3	45.00	8.20	36.90	7.71
RSM144-6-385P	385	48.80	10.15	40.41	9.54	19.2	287.9	45.40	8.24	37.10	7.75
RSM144-6-390P	390	49.00	10.25	40.55	9.63	19.4	291.6	45.70	8.28	37.40	7.79
RSM144-6-395P	395	49.20	10.35	40.69	9.72	19.7	295.4	45.75	8.35	37.45	7.89
RSM144-6-400P	400	49.40	10.45	40.83	9.81	19.9	299.1	45.80	8.44	37.50	7.98

12 Inspection and Maintenance

In order to ensure the long-term using of the installed PV system and maximize the Power output performance of the modules, the installed PV modules need to be inspected and maintained regularly. The inspection and maintenance of modules in the PV array shall be carried out by personnel who have received professional PV system maintenance training and obtained relevant qualifications and authorization.

12.1 Module visual inspection and replacement

- The PV modules installed in the PV array should be inspected periodically for damage. If functional and safety faults are found due to the following factors, the modules of the same type should be replaced immediately.

- ✓ PV modules have broken glass, scratched back sheet.
- ✓ Bubbles or delamination form a continuous path between electric circuit and the edge of the module.
- ✓ Junction box is deformed, cracked or burned, and the terminals cannot be connected well.

- Replace failed PV modules with same type. Do not touch live wires and connectors directly. When you need to touch them, use suitable safety devices (insulation tools/gloves, etc.).
- The warning signs on the PV modules must not be lost.
- Check the electrical, grounding and mechanical connections every 6 months to ensure they are clean and safe, free from damage or rust. Check that the mounting parts are tight. Check all cables and make sure that the connectors are securely. PV modules frames and bracket should be well mechanically connected.
- Check whether there is any foreign body on the surface of the PV modules and whether there is any shielding.
- When repairing PV modules, cover the surface of PV modules with opaque material to prevent electric shock. Exposure of PV modules to sunlight will generate high voltages, this is dangerous. Please pay attention to safety when maintenance and it must be done by professionals.
- When the irradiance is no less than 200W/m², if the terminal voltage is more than 5% different than the rated value, it illustrates the connection of the modules is not good.
- Comply with maintenance instructions for all modules used in the PV system, such as brackets, charging rectifiers, inverters, batteries, lightning protection systems, etc.
- Warning: Any electrical maintenance must shut down the PV system firstly. Improper system maintenance may cause fatal dangers such as electric shock and burning.

12.2 Cleaning

Dust accumulation on the glass surface of the module will reduce its power output and may cause hot spots. So the surface of photovoltaic modules should be kept clean. Maintenance work should be performed at least once a year or frequently.

Warning: It should be carried out by trained personnel. Workers should wear PPE, such as goggles, electric insulation gloves and safety shoes. The gloves should withstand DC voltages of no less than 2000V.

- Use dry or wet soft cloths, sponges, etc. to clean the modules during the cleaning process, but do not put any modules directly into the water, do not use corrosive solvents and do not wipe the PV modules with hard objects. When the pressure water is used, the water pressure on the glass surface of the module must not exceed 700 KPa. The module must not be subjected to additional external force. If necessary, use isopropyl alcohol (IPA) according to the safety instructions to clean and ensure that no IPA flows into the gap between the edge of

the module and the module frame.

- Clean PV modules when the irradiance is below 200W/m². Liquid with a large temperature difference compared to modules shall not be used for cleaning. For example, do not use cold water to clean the module when the temperature of it is high during the day, otherwise there will be the risk of module damage.
- It is forbidden to clean photovoltaic modules under weather conditions with heavy rain, heavy snow or winds greater than class 4.
- The back surface of the module normally does not need to be cleaned, but in the event this is deemed necessary, avoid the use of any sharp objects that might damage or penetrating the substrate material.
- Water requirements when cleaning:
  - ✓ PH: 5～7
  - ✓ Chloride or salt content: 0 - 3,000 mg/L
  - ✓ Turbidity: 0-30 NTU
  - ✓ Conductivity: 1500～3000 μs/cm
  - ✓ Total dissolved solids: ≤1000 mg/L
  - ✓ Water hardness: 0-40 mg/L
  - ✓ Non-alkaline water must be used, and softened water can be used when conditions permitted.
- **Module inspection after cleaning**
  - ✓ Visual inspection to check if the module is clean, bright and free of stains;
  - ✓ Spot check to verify whether there is soot deposit on the module surface;
  - ✓ Check to whether there are visible scratches on the surface of the module or not;
  - ✓ Check whether there is no man-made cracks on the module surface or not;
  - ✓ Check whether the module support structure is leaning or bent or not;
  - ✓ Check whether the connectors of the module are detached or not;
  - ✓ After cleaning, fill out the PV module cleaning record.

13 Troubleshooting

If the PV system does not work properly, please inform your installer immediately. It is recommended to perform a preventive inspection every six months, please don't change any modules of the modules. If electrical or mechanical properties are required for inspection or maintenance, qualified professionals should be advised to avoid any electric shock or loss of life.

14 DISCLAIMER

- Risen is not responsible for any form of damage, including but not limited to module operation and system installation error, and personnel injury, hurt, and property loss resulted from failure to follow the instructions in this Manual.
- Failure of the customer to follow the requirements outlined in this Manual during the installation of the module will result in the invalidity of product's limited warranty.
- Risen is not responsible for any infringement of third party patents or any other rights arising from the use of solar PV modules.
- Risen reserves the rights to change this Manual without prior notice.
- The information in this Manual is derived from knowledge and experience, and such information and recommendations do not constitute any warranty.

This Manual is available in electronic form only. Please call our customer service hotline (400-8291-000) if you need a hard copy.

In case of any discrepancy between the Chinese and English versions of this Manual, the Chinese version shall prevail.

Risen reserves the rights to interpret this Manual.